NOTRE DAME UNIVERSITY BANGLADESH

LAB MANUAL

for

EEE 2108: Electronic Devices and Circuits Lab

For the students of B. Sc. in CSE programme

Prepared by-

Baizeed Ahmed Bhuiyan

Lecturer of EEE

Department of CSE, NDUB

Student's Name: _____

Student ID: _____

Batch:

Academic Session:

Department of Computer Science and Engineering

Notre Dame University Bangladesh

GPO Box-7, 2/A Arambagh, Motijheel, Dhaka-1000

Experiment No.: 01
Name of the Experiment: I-V Characteristics of P-N Junction Diode

OBJECTIVE:
To study the I-V characteristics of p-n junction diodes.

THEORY:
A p-n junction diode, a non-linear device, conducts only in one direction. The I-V characteristics of the diode is curve between current through the diode and voltage across the diode. When external voltage is zero, circuit is open and the potential barrier does not allow the current to flow. Therefore, the circuit current is zero. When p-type (anode) is connected to **+ve** terminal and n- type (cathode) is connected to **–ve** terminal of the supply voltage, it is known as forward bias. The potential barrier is reduced when diode is in the forward biased condition. At some forward voltage, the potential barrier is altogether eliminated and current starts flowing through the diode and also in the circuit. The diode is said to be in ON state. The current increases with increasing forward voltage. When n-type (cathode) is connected to **+ve** terminal and p-type (Anode) is connected to **–ve** terminal of the supply voltage, it is known as reverse bias and the potential barrier across the junction increases. Therefore, the junction resistance becomes very high and a very small current (reverse saturation current) flows in the circuit. The diode is said to be in OFF state. The reverse bias current is due to minority charge carriers.

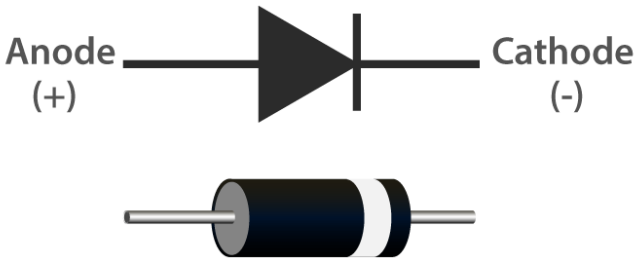

Figure-1.1: Symbol and practical view of a Diode.

EQUIPMENTS & COMPONENTS:

Sl no.	Component Details	Specification	Quantity
1.	p-n junction diode	1N4007	1 piece
2.	Resistor	1KΩ	1 piece
3.	Signal generator		1 unit
4.	Trainer Board		1 unit
5.	DC power Supply		1 unit
6.	Digital Storage Oscilloscope		1 unit
7.	Digital Multimeter		1 unit
8.	Chords and wire		as required

CIRCUIT DIAGRAMS:

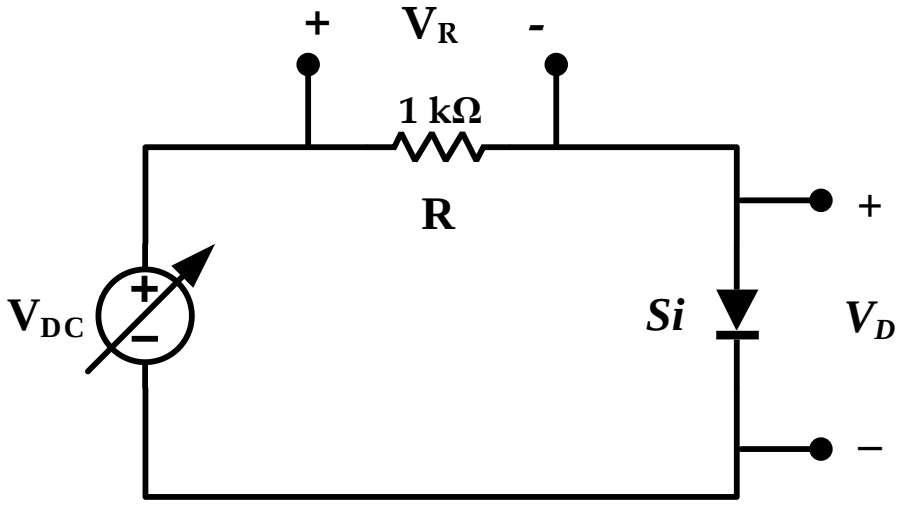

Fig 1.2: Circuit diagram for diode forward bias characteristics

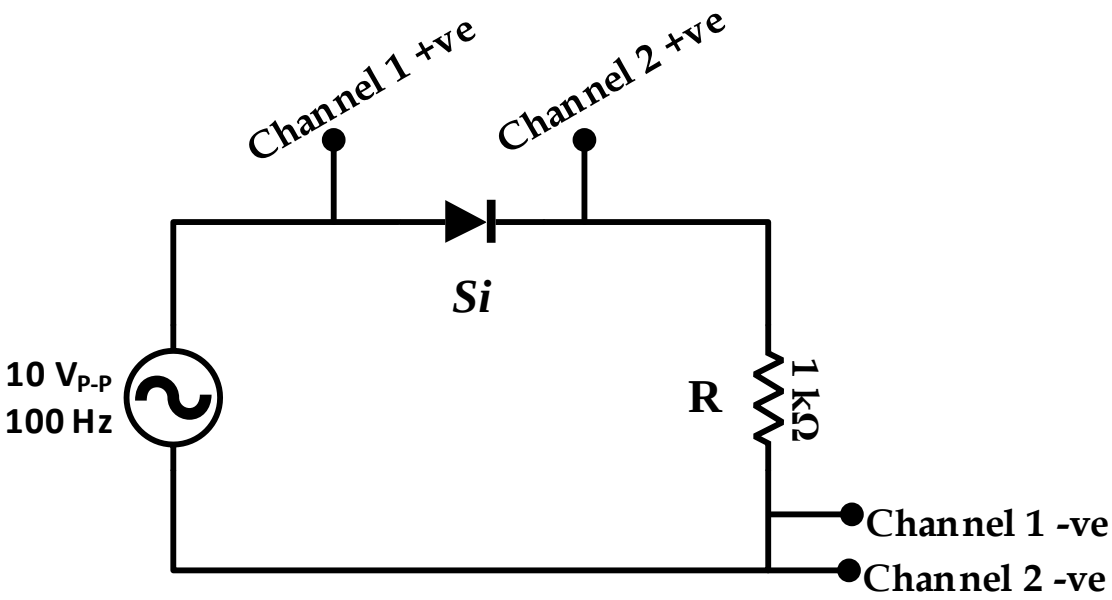

Fig 1.3: Circuit diagram for obtaining diode characteristics from oscilloscope

EXPECTED WAVEFORMS:

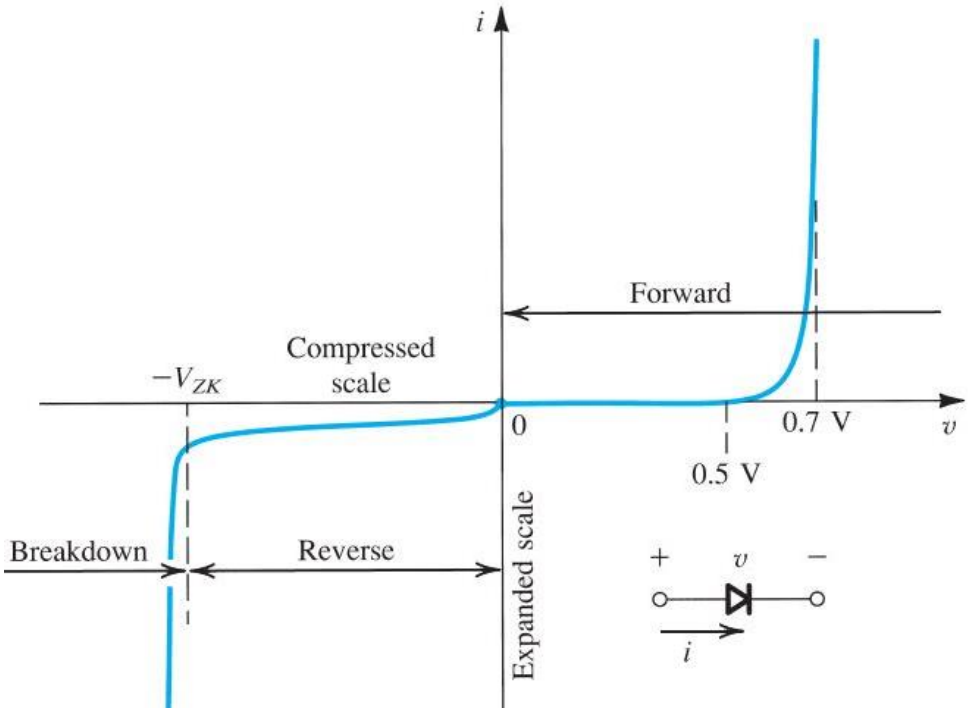

Fig 1.4: The diode ***i–v*** relationship with some scales expanded and others compressed in order to reveal details.

PROCEDURES:

1. Connections are made as per the circuit diagram in Fig. 1.2 using conventional diode.
2. Switch on the power supply. Vary input voltage (V_{DC}) and measure V_D, V_R for values of V_D=0.1V, 0.2V, 0.3V, 0.4V, 0.5V, 0.6V, 0.7V and so on. Obtain maximum value of V_D without increasing V_{DC} beyond 20 V.
3. Note down the corresponding current flowing through the diode (I_D) which can be measured by measuring resistance voltage (V_R) and using $I_D = V_R/ R$.
4. The readings of voltage (V_D) and current (I_D) are tabulated.
5. Graph is plotted between voltage $\mathbf{V_D}$ (*x* axis) and current $\mathbf{I_D}$ (*y* axis).
6. Now connect the circuit according to Fig. 1.3. Set the Digital Storage Oscilloscope (DSO) in **X-Y mode**. You will be able to see the I-V Characteristic curve in the DSO.

ASSIGNMENTS:

1. Draw the I-V Characteristic curve of a diode form the experimental data obtained.
2. Why is diode considered as a non-linear device?
3. What are the applications of a p-n diode?
4. What is PIV?
5. What is the break down voltage?
6. Submit the printed I-V Characteristic curve of diode obtained from DSO.

Experiment No: 02
Name of the Experiment: Zener Diode applications

OBJECTIVE:
Study of the Zener Diode applications.

THEORY:
The diodes we have studied before do not operate in the breakdown region because this may damage them. A Zener diode is different; it is a silicon diode that the manufacturer has optimized for operation in the breakdown region. It is used to build voltage regulator circuits that circuits that hold the load voltage almost constant despite large change in line voltage and load resistance. The symbol of Zener diode shows in figure 2.1.

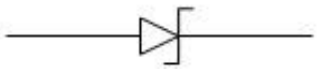

Figure 2.1: Symbol of Zener Diode.

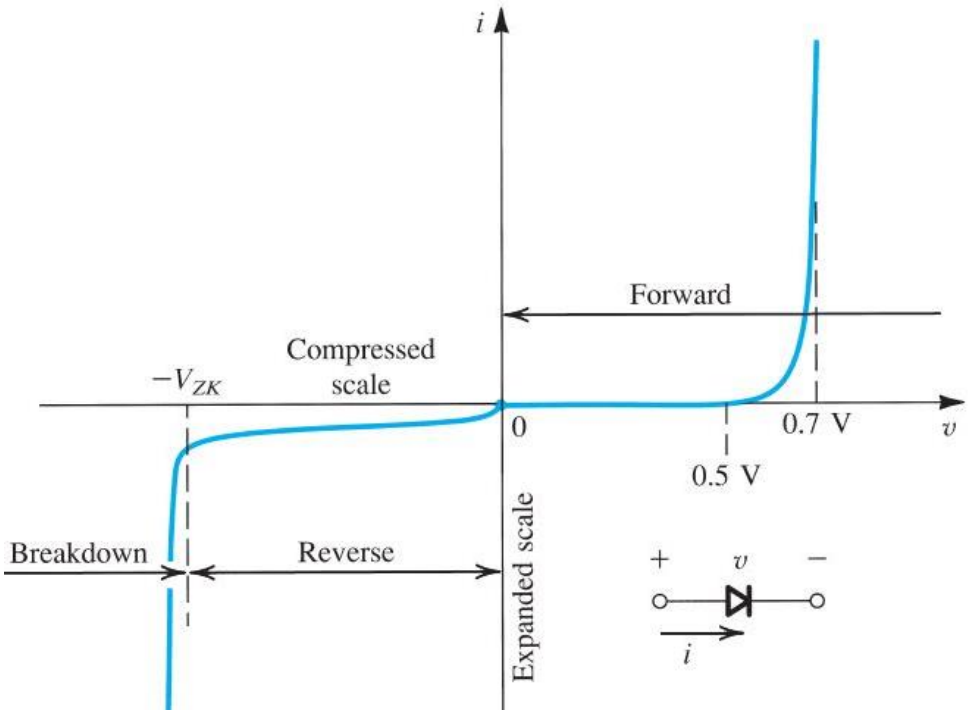

Figure 2.2: I - V Characteristics of Zener Diode.

The Zener diode may have a breakdown voltage from about 2 to 200 volts. These diodes can operate in any of three regions – forward, leakage and breakdown. Figure 2.2 shows the I-V characteristics curve of Zener diode.

- In the forward region it works as an ordinary diode.
- In the leakage region (between zero and breakdown) it has only a small reverse saturation current.
- In the breakdown it has a sharp knee, followed by an almost vertical increase in current without changing the voltage.
- The voltage is almost constant, approximately equal to $V_{z\ over}$ most of the breakdown region.

<u>Equivalent circuits of Zener Diode:</u> As the voltage remains constant across the Zener diode though the current changes through it, it is considered as a constant voltage source according to the first approximation.

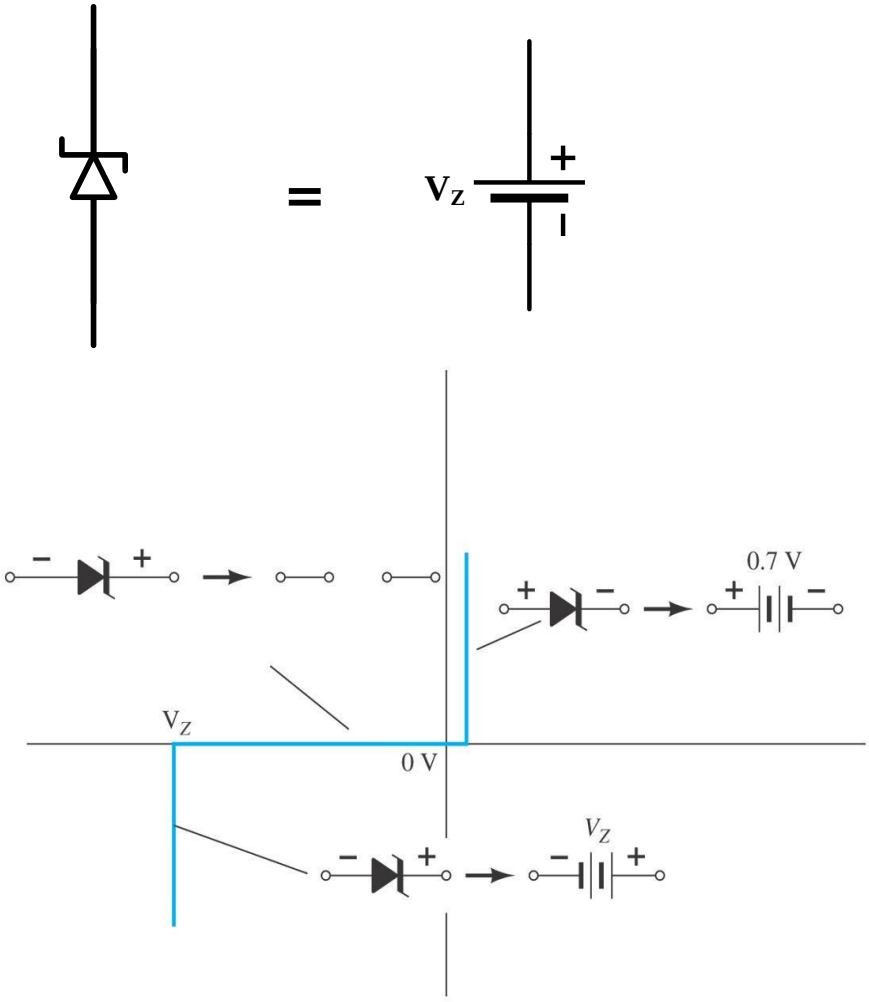

Figure-2.3: <u>Approximate equivalent circuits for the Zener diode in the three possible regions of application.</u>

EQUIPMENTS & COMPONENTS:

Sl. no.	Component Details	Specification	Quantity
1.	Zener diode	5 volts	1 piece
2.	Resistor	220Ω,470Ω, 1KΩ	1 piece each
3.	POT	10KΩ	1 unit
4.	Trainer Board		1 unit
5.	DC Power Supply		1 unit
6.	Digital Multimeter		1 unit
7.	Chords and wire		as required

EXPERIMENTAL SETUP:

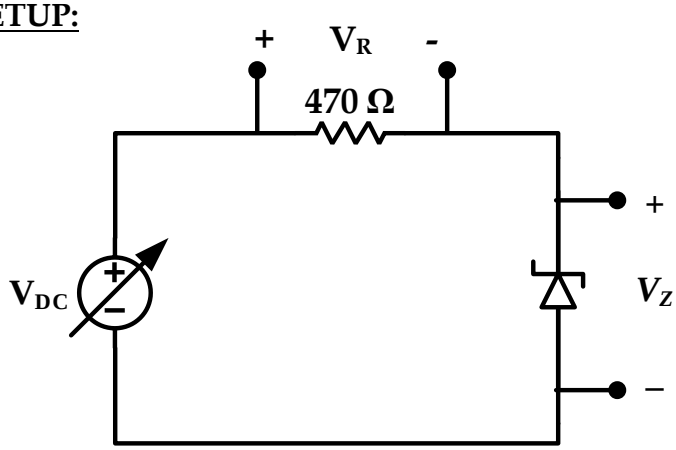

Figure 2.4: Experimental Circuit 1.

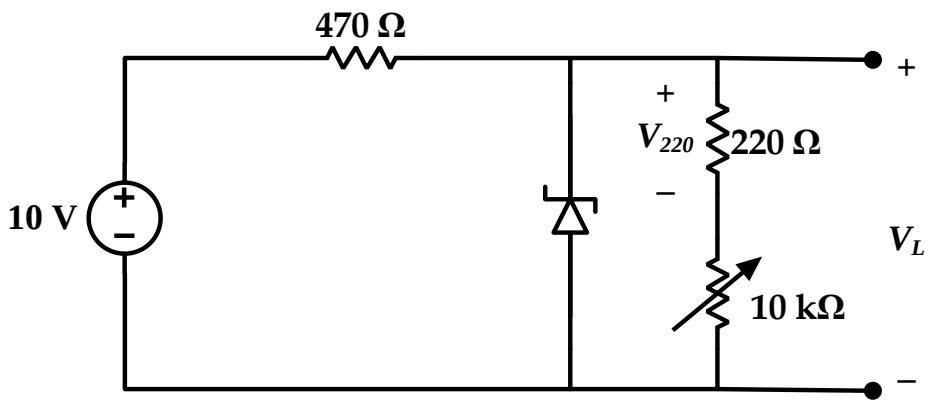

Figure 2.5: Experimental Circuit 2.

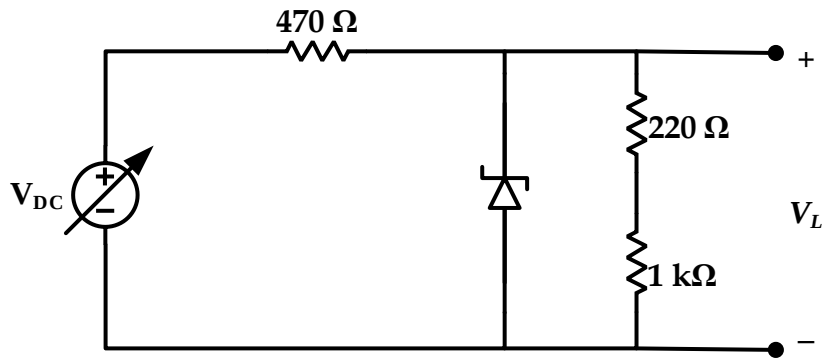

Figure 2.6: Experimental Circuit 3.

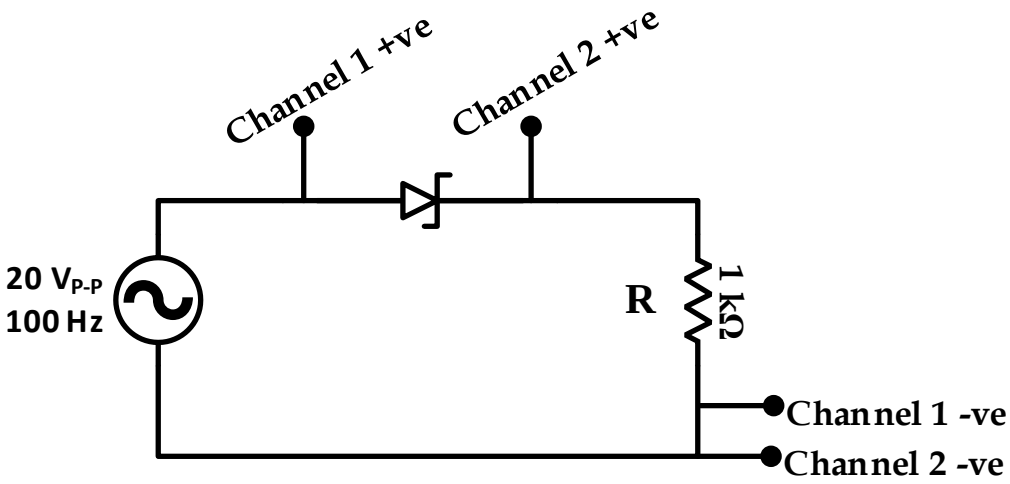

Fig 2.7: Circuit diagram for obtaining ZENER diode characteristics from oscilloscope

PROCEDURES:

1. Connect the circuit as shown in the figure 2.4.
2. Vary the supply voltage from zero volt, complete the Table 2.1.
3. Connect the circuit as shown in the figure 2.5
4. Keep the POT at maximum position and power up the circuit. Apply 10 as V.
5. Gradually decrease the POT resistance and complete the Table 2.2.
6. Replace load with 1KΩ resistance, as shown figure-2.6, vary the supply voltage and take reading for Table 2.3.
7. Now connect the circuit according to Fig. 2.7. Set the Digital Storage Oscilloscope (DSO) in **X-Y mode**. You will be able to see the I-V Characteristic curve in the DSO.

ASSIGNMENTS:

1. Plot the I - V characteristics of Zener diode. Determine the Zener breakdown voltage from the plot.
2. Plot I_L vs V_L for the data table 4.2. Find the voltage regulation.
3. Plot V_L vs V for the data table 4.3. Find the voltage regulation.
4. Submit the printed I-V Characteristic curve of Zener diode obtained from DSO.

Experiment No.: 03
Name of the Experiment: Design of Clippers

OBJECTIVE: To study and design clippers.

THEORY:
Clippers: Clippers remove signal voltage above and below a specified level. In the experiment no. 2, half wave rectifier can also be called as a clipper circuit. Because it clipped off the negative half cycle of the input signal.
A diode connected in series with the load can clipped off any half cycle of input depending on the orientation of the diode. (Figure 3.1) -

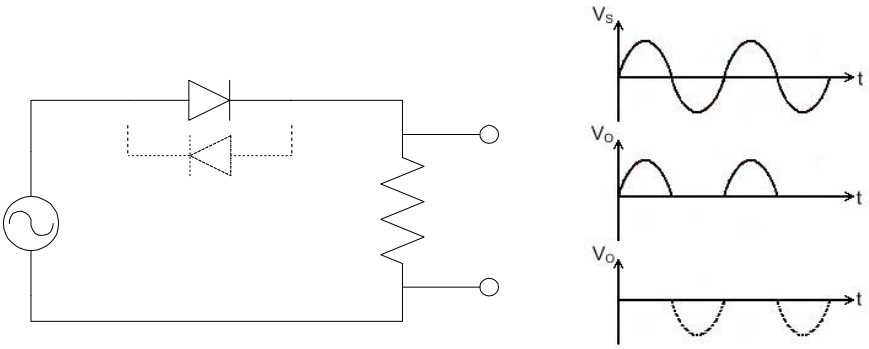

Figure 3.1: Simple Diode Clipper.

It is also possible to clip off a certain part of the input signal bellow a specified signal level by using a voltage source in reverse bias condition with the diode. If a battery of **V** volts is added to it, then for $\mathbf{V_s}$ above **(V+0.7)** volts the diode becomes forward bias and turns ON. The load receives above this voltage level.

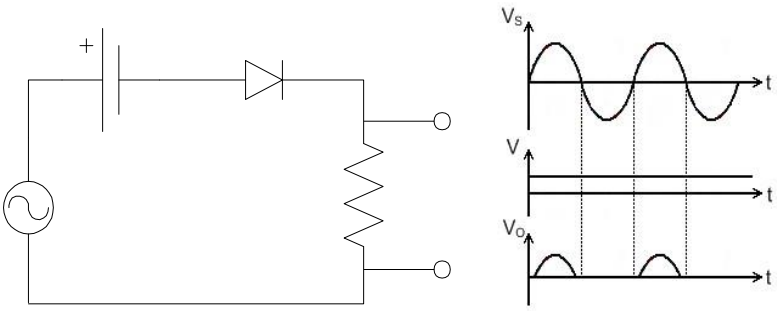

Figure 3.2: Clipper Circuit Using Bias Diode.

A diode connected in parallel with the load can clip off the input signal above 0.7 volts of one-half cycle depending on the connection of the diode. Using two diodes in parallel in opposite direction both the half cycle can be limited to 0.7 volts.

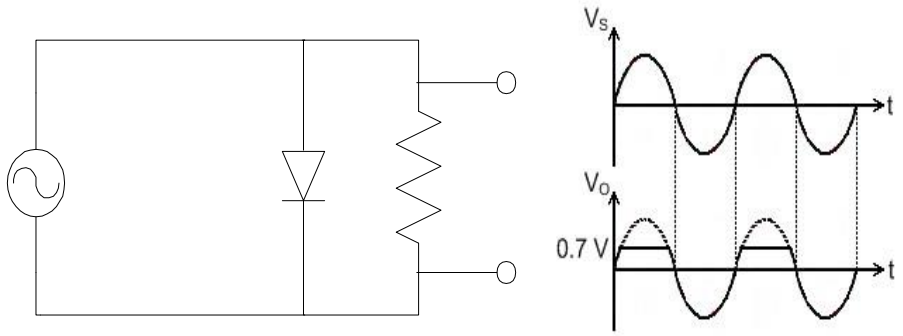

Figure 3.3: <u>Parallel Clipper Circuit.</u>

Using a biased diode, it is possible to limit the output voltage to a specified level depending on the attached battery voltage. Either the half cycles or both of them can be clipped off above a specified level.

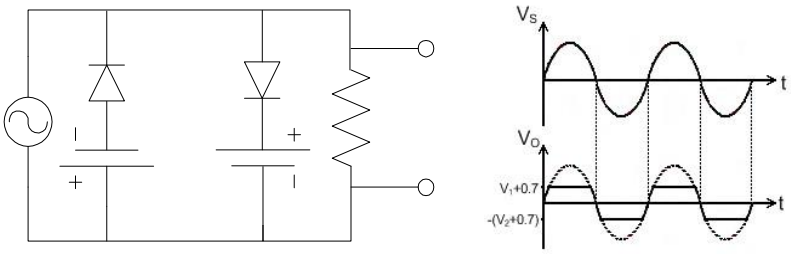

Figure 3.4: <u>Biased Parallel Clipper Circuit.</u>

In practical case for both the series and parallel clippers voltage source is not added. Required voltage levels are maintained by adding more semiconductor diode.

<u>PROCEDURES for Designing a Biased Parallel Clipper Network:</u>

i) ***<u>Determine the direction of the diode.</u>*** It depends on the direction of the half cycle in which the peak can be seen or the peak is not clipped.

<u>If peak can be seen or is not clipped in the Positive half-cycle:</u>

Upward

<u>If peak can be seen or is not clipped in the Negative half-cycle</u>:

Downward

ii) If any half-cycle is clipped or has a certain DC value, then **the polarity of the biasing DC voltage source** can be determined as follows.

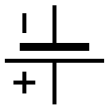

-ve polarity with respect to output

*If the **Negative half cycle** is clipped*
*If whole **Positive half cycle** has a **negative** DC value*
*If whole output waveshape is in the **Negative side***

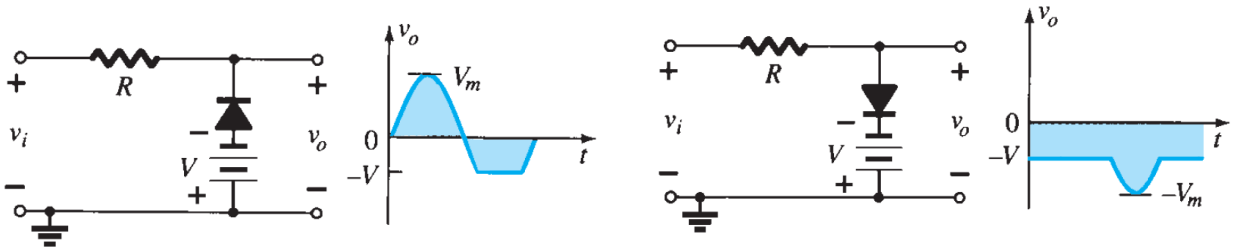

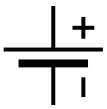

+ve polarity with respect to output

*If the **Positive half cycle** is clipped*
*whole **Negative half cycle** has a **positive** DC value*
*whole output waveshape is in the **Positive side***

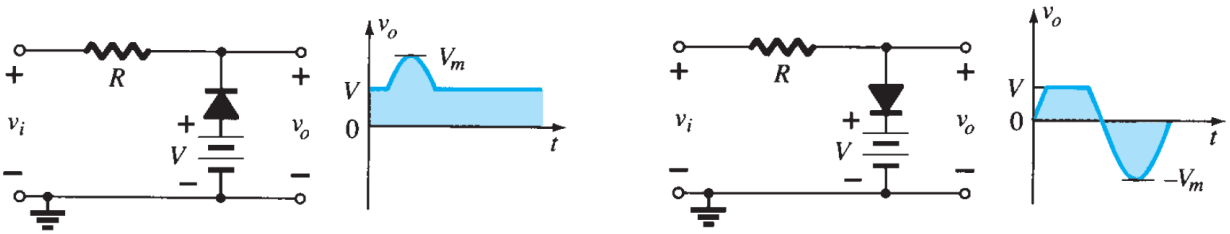

iii) *V_{DC} Value Calculations:*

a) KVL equation at the Output Loop:

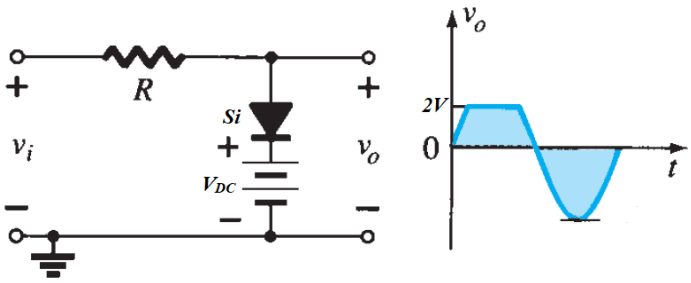

$-V_{DC}-V_D+V_O=0$
Or, $V_O=V_{DC}+V_D$
Or, $2= V_{DC}+0.7$
Therefore, $V_{DC}=1.3$ V

b) KVL equation at the Output Loop:

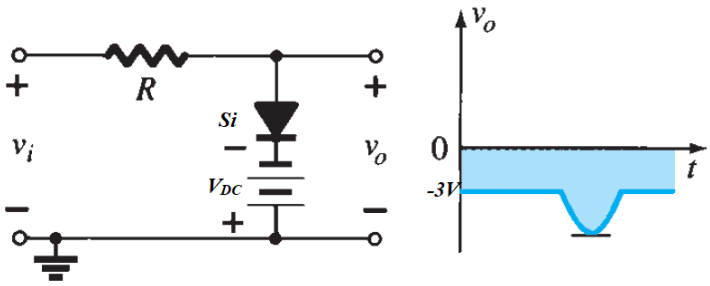

$+V_{DC}-V_D+V_O=0$
Or, $V_O=-V_{DC}+V_D$
Or, $-3= -V_{DC}+0.7$
Therefore, $V_{DC}=3.7$ V

c) KVL equation at the Output Loop:

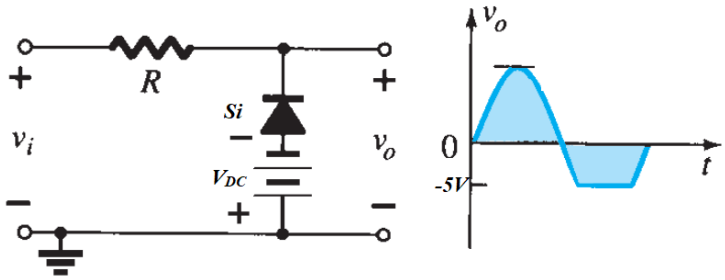

$+V_{DC}+V_D+V_O=0$
Or, $V_O=-V_{DC}-V_D$
Or, $-5= -V_{DC}-0.7$
Therefore, $V_{DC}=4.3$ V

d) KVL equation at the Output Loop:

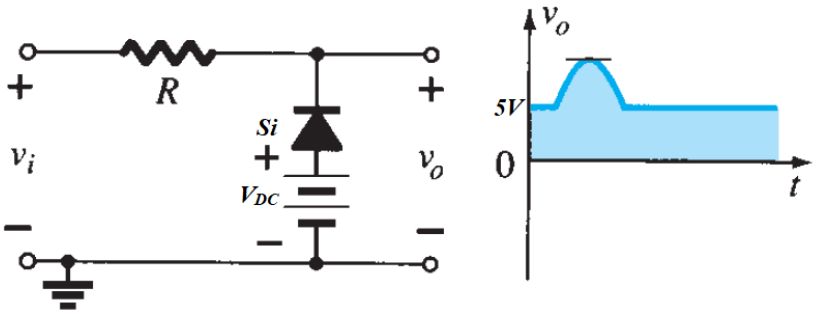

$-V_{DC}+V_D+V_O=0$
Or, $V_O=V_{DC}-V_D$
Or, $5= V_{DC}-0.7$
Therefore, $V_{DC}=5.7$ V

LAB TASKS:

- **Design a Biased Parallel Clipper Network from the following Output waveshape as shown in figure-3.13.**

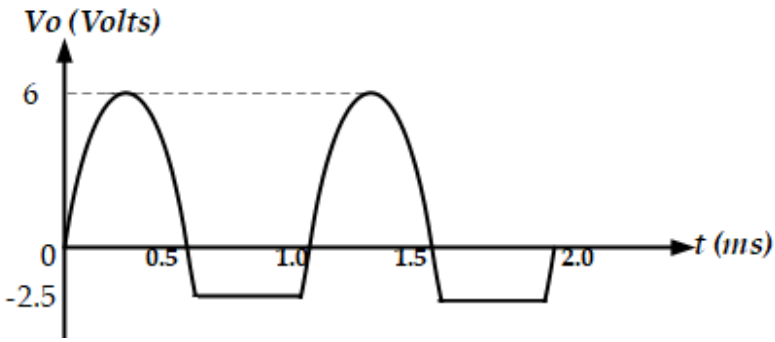

Figure-3.13

From the figure, the following information can be extracted initially-
T= 1 ms, so f= 1/T = 1 kHz
Peak value of the input signal= 6V, sinusoidal input

Now, i) Since the ***peak can be seen or is not clipped in the Positive half-cycle, so the diode direction is upward.***

Since *the* ***Negative half cycle*** *is clipped*, the biasing DC voltage source has a Negative polarity with respect to the output.

So, the circuit looks like the following-

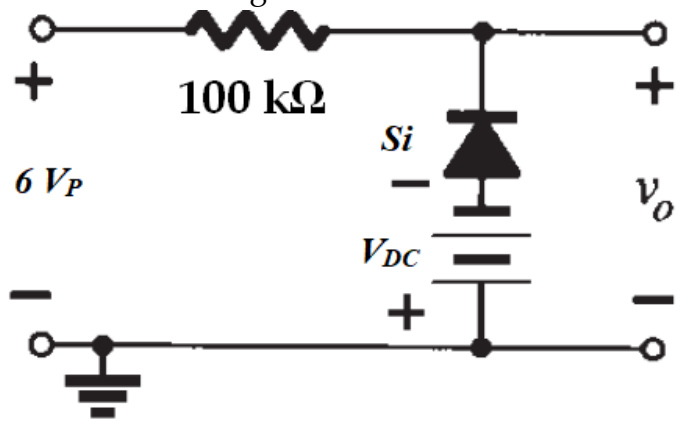

KVL equation at the Output Loop:
$+V_{DC}+V_D+V_O=0$
Or, $V_O=-V_{DC}-V_D$
Or, $-2.5= -V_{DC}-0.7$
Therefore, $V_{DC}=1.8$ V

- **Design a Biased Parallel Clipper Network from the following Output waveshape as shown in figure 3.14.**

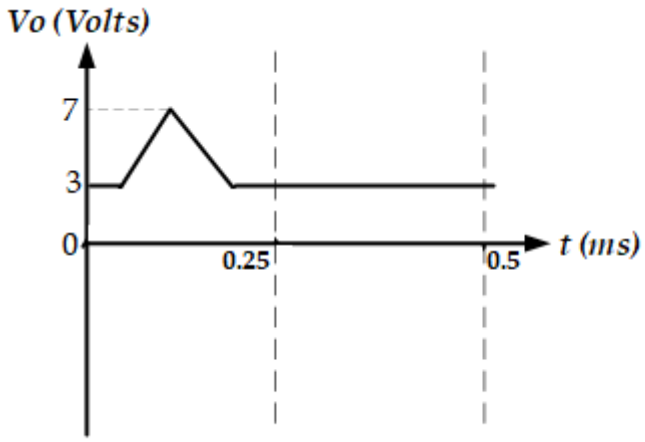

Figure-3.14

DESIGN it yourself.

ASSIGNMENTS:

1. Submit all the printed waveforms observed on the oscilloscope.

Experiment No.: 04
Name of the Experiment: Design of Clampers

OBJECTIVE: To study and design clampers.

THEORY:
A clamper is a network constructed of a diode, a resistor, and a capacitor that shifts a waveform to a different dc level without changing the appearance of the applied signal.

Additional shifts can also be obtained by introducing a dc supply to the basic structure. The chosen resistor and capacitor of the network must be chosen such that the time constant determined by $\tau = RC$ is sufficiently large to ensure that the voltage across the capacitor does not discharge significantly during the interval the diode is nonconducting.

Clamping networks have a capacitor connected directly from input to output with a resistive element in parallel with the output signal. The diode is also in parallel with the output signal but may or may not have a series dc supply as an added element.

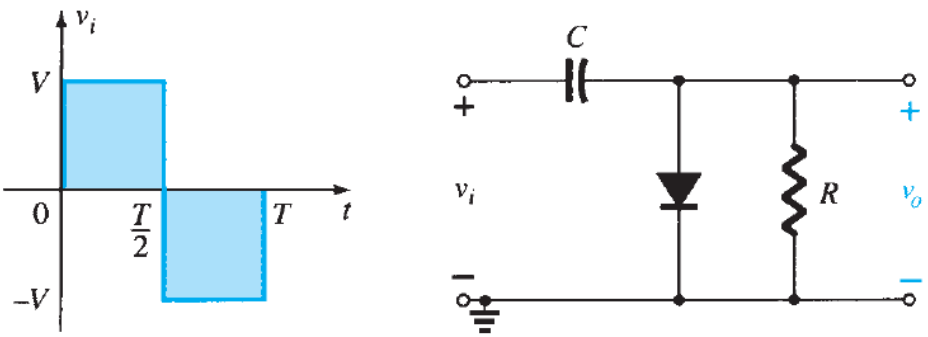

Figure-4.1: Simple Clamper

Equipments And Components:

Sl no.	Component Details	Specification	Quantity
1.	p-n junction diode	1N4007	1 piece
2.	Resistor	100KΩ	1 piece
3.	Capacitor	0.1μF	1 piece
4.	Signal generator		1 unit
5.	Trainer Board		1 unit
6.	DC power Supply		1 unit
7.	Digital Storage Oscilloscope		1 unit
8.	Digital Multimeter		1 unit
9.	Chords and wire		as required

PROCEDURES for Designing a Biased Clamper Network:

i) Make the following observations of the output wave shapes shown in Figure- 4.2.

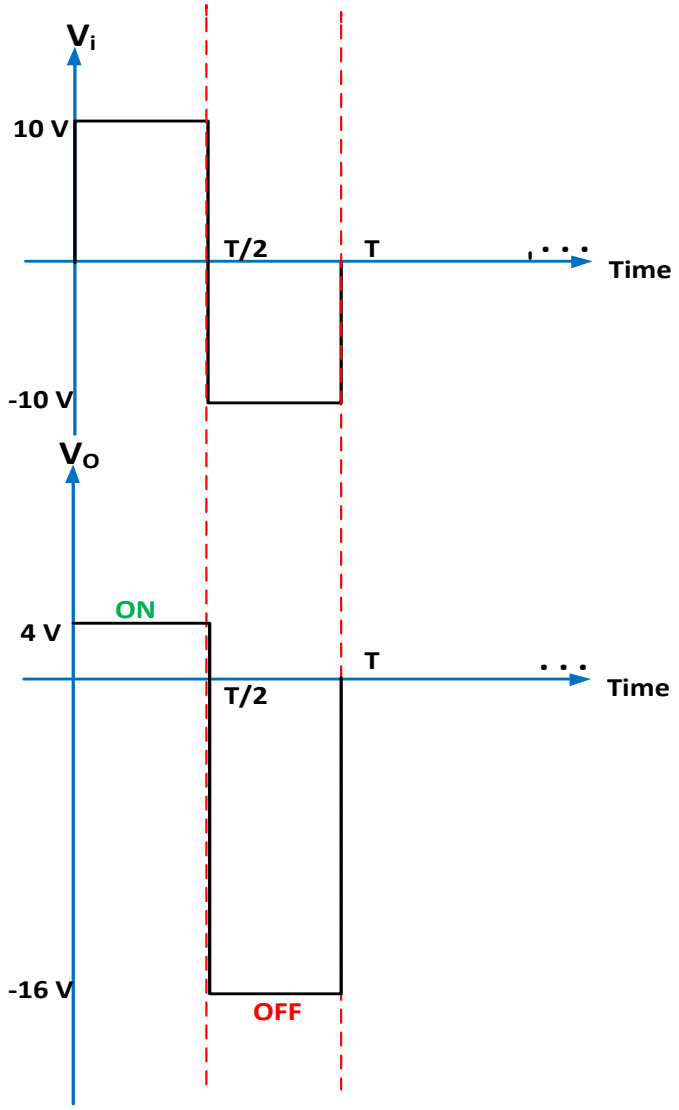

Figure-4.2

ii) Whether the output waveshape is shifted upward or downward with respect to the input waveshape. [To determine the direction/orientation of the diode.]

For downward shift-

For upward shift-

iii) Smaller voltage level is found during "**ON**" state of the diode and the greater voltage level is found during "**OFF**" state.

- If the "**ON**" state V_O is positive and V_O**>0.7**, a positive (**+ve**) dc voltage source is connected in series with the diode.
- If the "ON" state V_O is negative and V_O**<-0.7**, a negative (**-ve**) dc voltage source is connected in series with the diode.

iv) **Peak-to-peak input voltage ($V_{i\,P\text{-}P}$)** is equal to **Peak-to-peak output voltage ($V_{O\,P\text{-}P}$)** in a clamper network.

Now we observe the output waveshape in fig. 4.2.

a) Voltage level shifted downward, so diode orientation is-

b) The diode is "**ON**" during the **positive half cycle** of V_i, i.e., 0<t<T/2. "**ON**" state V_O= 4 V. "**ON**" state V_O= 4 V>0.7. So, a **positive (+ve)** dc voltage source, V_{DC} is connected in series with the diode. The value of V_{DC} is calculated by applying KVL in the output loop of figure-2.

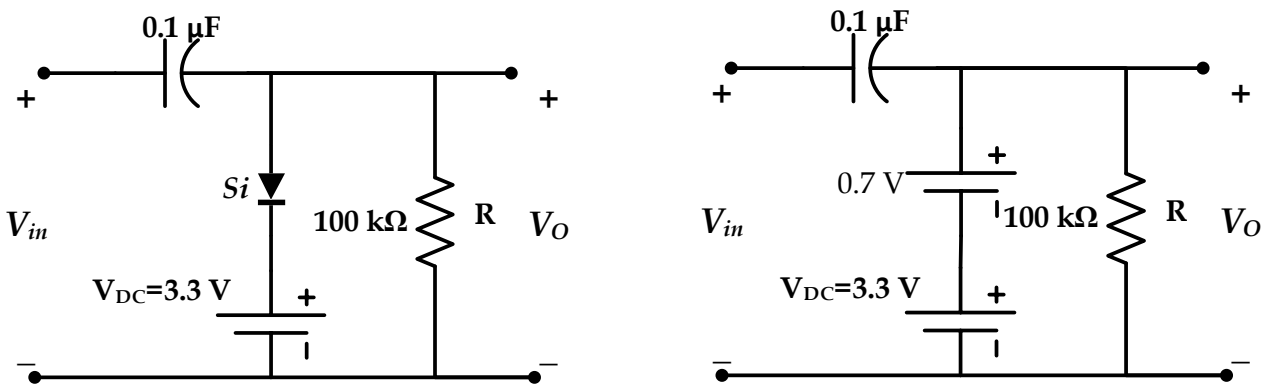

Figure-4.3

KVL equation in the output loop,

$$-V_{DC}-0.7+V_O=0$$
$$\Rightarrow -V_{DC}-0.7+4=0$$
$$\therefore V_{DC}= 3.3\ V$$

c) $V_{i\,P\text{-}P}$= 10-(-10) V = 20 V and $V_{O\,P\text{-}P}$ = 4-(-16) = 20 V

Choosing appropriate values of R and C is very important proper clamping action. For this purpose, the following equation should be satisfied as minimum requirement-

RC=10T

Suppose, the input signal, Vi, has a frequency of 1 kHz, then its $\mathbf{T=\frac{1}{f}=\frac{1}{1\,kHZ}= 1\ ms}$

If we choose R= 100 kΩ, then

$$RC= 10\ ms$$
$$\Rightarrow\ 100\ k\Omega \times C = 10\ ms \Rightarrow\ C = \frac{10\ ms}{100\ k\Omega}$$
$$\therefore \boldsymbol{C = 0.1\ \mu F}$$

Now connect the circuit with appropriate parameters as calculated, and observe the input and output waveshapes in the Digital Storage Oscilloscope.

LAB TASKS:

Design a biased clamper network from the following waveshapes shown in figure-4.4.

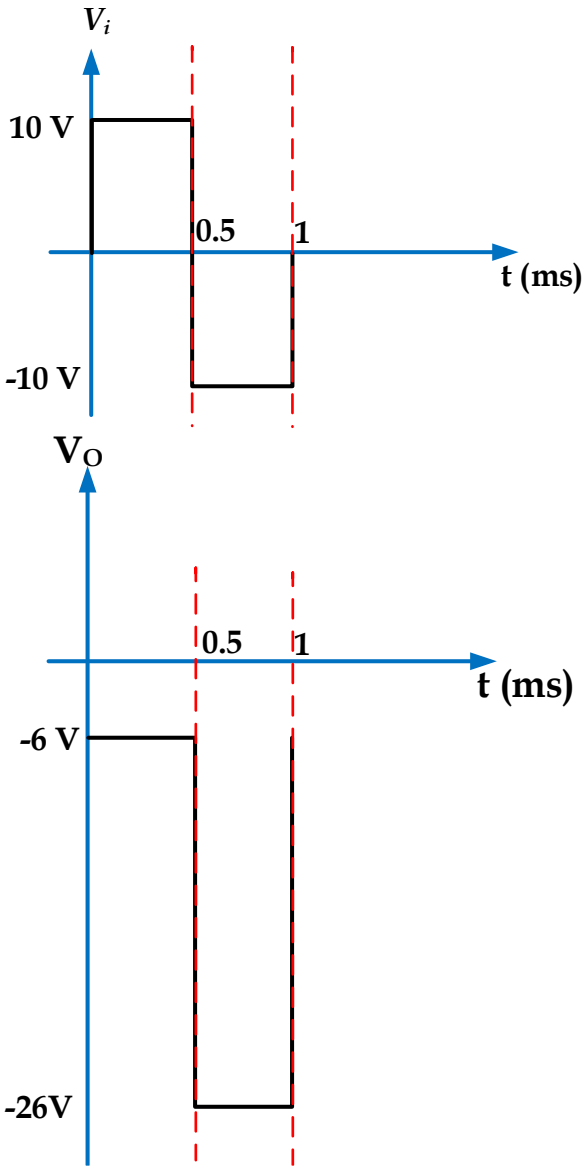

Figure-4.4

ASSIGNMENTS:

1. Submit all the printed waveforms observed on the oscilloscope.
2. What role dose the value of capacitor used in the clamping circuit play in order to obtain proper clamping?

Experiment No: 05
Name of the Experiment: Diode Rectifier Circuits.

OBJECTIVE: Study of different diode rectifier circuits.

THEORY:
Because of their ability to conduct current in one direction and block current in the other direction, diodes are used in circuits called ***rectifiers*** that ***convert AC signal into DC signal.*** Rectifiers are found in all DC power supplies that operate from an AC voltage source. A power supply is an essential part of each electronic system from the simplest to the most complex. From the characteristic curve of a diode, we observe that it allows the current to flow when it is in the forward bias only. In the reverse bias it remains open. So, when an alternating voltage (signal) is applied across a diode it allows only the half cycle (positive half cycle depending on the orientation of diode in the circuit) during its forward bias condition, other half cycle will be clipped off. In the output the load will get DC signal. Diode rectifier can be categorized in two major types. They are -

- Half-wave rectifier.
- Full-wave rectifier.

Half - Wave Rectifier: Half-wave rectifier can be built by using a single diode. The circuit diagram and the wave shapes of the input and output voltage of half wave rectifier are shown below (figure 5.1) –

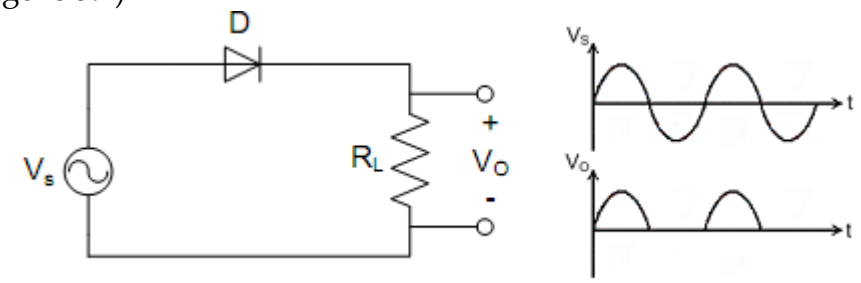

Figure 5.1: Half Wave Rectifier.

The major disadvantages of half wave rectifier are -

- In this circuit the load receives approximately half of input power.
- Average DC voltage is low.
- Due to the presence of ripple output voltage is not smooth one.

Full Wave Rectifier: in the full-wave rectifier both the half cycle is present in the output. Two circuits are used as full-wave rectifier are shown below -

- Full-wave rectifier using center-tapped transformer
- Full-wave bridge rectifier

Full-wave bridge rectifier: a bridge rectifier overcomes all the disadvantages of described above. Here four diodes will be connected as bridge connection. The circuit diagram and the wave shapes are shown in bellow (figure 5.3) –

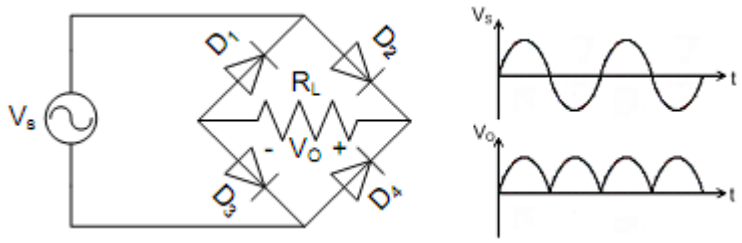

Figure 5.3: Full Wave Bridge Rectifier.

This rectifier however cannot produce a smooth DC voltage. It produces some ripple in the output. This ripple can be reducing by using filter capacitor across the load.

EQUIPMENTS & COMPONENTS:

Details	Specification	Quantity
p-n junction	diode 1N4007	4 pieces
Resistor	10KΩ	1 piece
Capacitor	0.1 µF, 0.22 µF, 1 µF	1 piece each
Signal generator		1 unit
Trainer Board		1 unit
Digital Storage Oscilloscope		1 unit
Digital Multimeter		1 unit
Chords and wire		as required

EXPERIMENTAL SETUP:

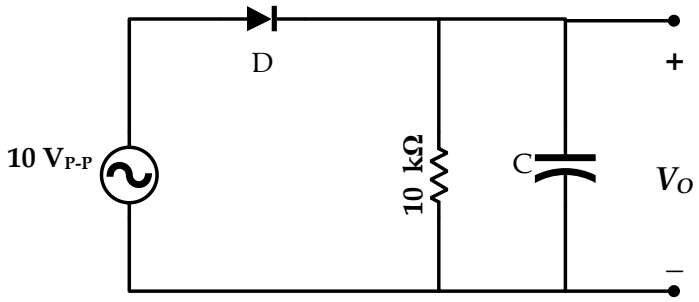

Figure 5.4: Experimental Circuit 1.

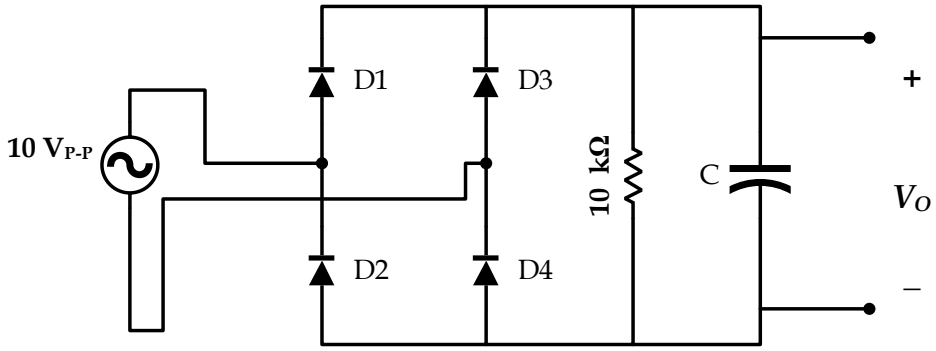

Figure 5.5: Experimental Circuit 2.

PROCEDURES:

1. Connect the circuit in breadboard as shown in figure 5.4 without capacitor.
2. Observe the output and input voltages in the oscilloscope.
3. Connect the 0.1 μF capacitor and repeat step 2.
4. Connect the 0.22 μF capacitor and repeat step 2. How does the output wave-shape differ from that in step 3?
5. Connect the 1μF capacitor and repeat step 2. How does the output wave-shape differ from that in step 3 and 4?
6. Vary the frequencies at 1 KHz, 5 KHz, and 10 KHz. What effects do you observe when frequency is changed?
7. Connect the circuit in breadboard as shown in figure 5.5 without capacitor.
8. Observe the output and input voltages in the oscilloscope.
9. Connect the 0.1 μF capacitor and repeat step 8.
10. Connect the 0.22 μF capacitor and repeat step 8. How does the output wave-shape differ from that in step 9?
11. Connect the 1 μF capacitor and repeat step 8. How does the output wave-shape differ from that in step 9 and 10?
12. Vary the frequencies at 1 KHz, 5 KHz, and 10 KHz. What effects do you observe when frequency is changed?

ASSIGNMENTS:

1. Write the answers that were asked during the working procedure.
2. Submit all the printed waveforms observed on DSO.
3. What is the effect in output for changing input signal frequency for both the circuits (without and with capacitor)?
4. What is the function of capacitor in the both circuits? Why a capacitor of higher value is preferable?

Experiment No: 06
Name of the Experiment: The output characteristics of Common-Emitter configuration of BJT.

OBJECTIVE:
Study of the output characteristics of CE (common emitter) configuration of BJT.

THEORY:
Unlike the diode, which has two doped regions, a transistor has three doped regions. They are-Emitter, Base and Collector. These three doped regions form two junctions: One between the emitter and base and other between the collector and the base. Because of these it can be thought as combination of two diodes, the emitter and the base form one diode and the collector and base form another diode. The emitter is heavily doped. Its job is to emit or inject free majority carrier (electron for NPN and hole for PNP) into the base. The base is lightly doped and very thin. It passes the most of the emitter-injected electron (for NPN) into the collector. The doping level of the collector is between emitter and base. Figure 6.1 shows the biased NPN transistor.

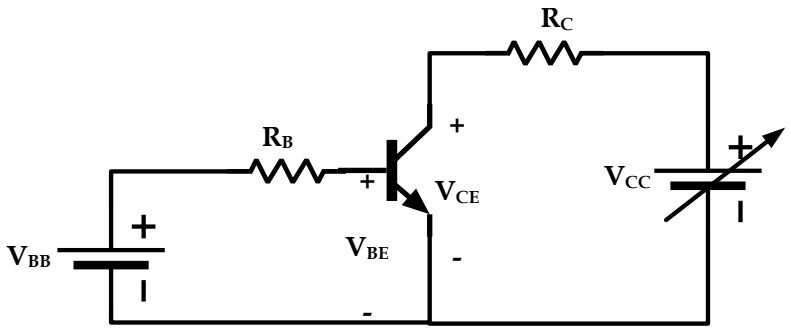

Fig.-6.1: *Biasing of an NPN transistor*

If the V_{BB} is greater than the barrier potential, emitter electron will enter base region. The free electron can flow either into the base or into the collector. As base lightly doped and thin, most of the free electron will enter into the collector. There are three different currents in a transistor. They are emitter current (I_E), collector current (I_C), and the base current (I_B) are shows in figure 6.2.

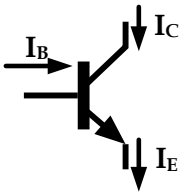

Fig.-6.2: *Different current in transistor.*

Here, $\mathbf{I_E = I_C + I_B}$, and the current gain, $\boldsymbol{\beta = I_C/I_B}$

Characteristics Curves: The characteristic of a transistor is measured by two characteristics curve. They are as follows –

- Input characteristics curve
- Output characteristics curve

Input Characteristics Curve: Input characteristics is defined as the set of curves between input current (I_B) vs. input voltage (V_{BE}) for the constant output voltage (V_{CE}). It is the same curve that is found for a forward biased diode.
Output Characteristics Curve: Output characteristics is defined by the set of curves between output current (I_C) vs. output voltage (V_{CE}) for the constant input current (I_B). The curve has the following features –

- It has three regions namely Saturation, Active and Cutoff region.
- The rising part of the curve, where V_{CE} is between 0 and approximately 1 volt is called saturation region. In this region the collector diode is not reversed biased.
- When the collector diode of the transistor becomes reverse biased, the graph becomes horizontal. In this region the collector remains almost constant. This region is known as the active region. In applications where the transistor amplifies weak radio and TV signal, it will always be operation in the active region.
- When the base current is zero, but there is some collector current. This region of the transistor curve is known as the cutoff region. The small collector current is called collector cutoff current.

For different value of base current (I_B) an individual curve can be obtained.

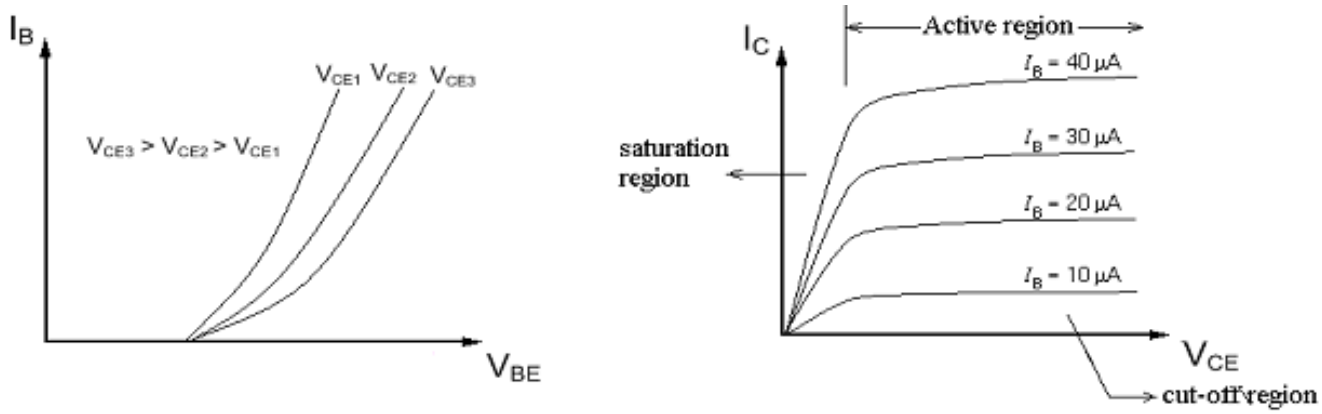

Fig.-6.3: *(a) Input Characteristic, (b) Output Characteristic of NPN transistor.*

EQUIPMENTS & COMPONENTS:

Component Details	Specification	Quantity
BJT	C828/BD135	1 piece
Resistor	1KΩ, 470KΩ	1 piece each
Trainer Board		1 Unit
DC Power Supply		1 unit
Digital Multimeter		1 unit
Chords and wire		as required

EXPERIMENTAL SETUP:

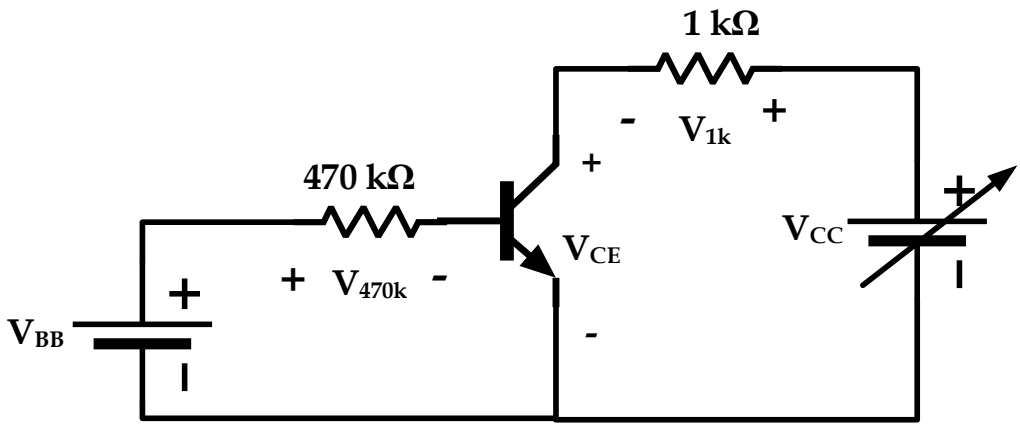

Fig 6.4: *Experimental Circuit.*

PROCEDURES:

1. Connect the circuit as shown in the figure 6.4.
2. Set V_{BB} to a fixed voltage. (This will fix I_B)

   $I_B = \frac{V_{BB} - 0.7}{470\ k\Omega}$ ***(Theoretically)***

   $I_B = \frac{V_{470k}}{470\ k\Omega}$ ***(Experimentally)***
3. Now vary V_{CC} and measure the voltages of V_{CE} and V_{1k}. And calculate I_C using $I_C = \frac{V_{1k}}{1k\Omega}$.
4. Take at least 10 reading by varying the V_{CC}.
5. Repeat step 1 to 4 by setting different I_B.

ASSIGNMENTS:

1. Plot the graph of I_C vs. V_{CE} with necessary details. Show the different regions of operation.
2. Why in the Active region of the graph, I_C keeps on increasing having a slope rather than remaining constant? Explain in details.

Experiment No: 07
Name of the Experiment: The BJT Biasing Circuits.

OBJECTIVE:
Study of the BJT Biasing Circuits.

THEORY:
Biasing a BJT circuit means to provide appropriate direct potentials and currents, using external sources, to establish an operating point or Q-point in the active region. Once the Q-point is established, the time varying excursions of input signal should cause an output signal of same waveform. If the output signal is not a faithful reproduction of the input signal, for example, if it is clipped on one side, the operating point is unsatisfactory and should be relocated on the collector characteristics. Therefore, the main objective of biasing a BJT circuit is to choose the proper Q-point for faithful reproduction of the input signal. There are different types of biasing circuit. However, in the laboratory, we will study only the fixed bias and self-bias circuit. In the fixed bias circuit, shown if figure 8.1, the base current I_B is determined by the base resistance R_B and it remains constant. The main drawback of this circuit is the instability of Q-point with the variation of β of the transistor. In the laboratory, we will test the stability using two transistors with different β. In the self-bias circuit shown if figure 7.2, this problem is overcome by using the self-biasing resistor R_E to the emitter terminal.

EQUIPMENTS & COMPONENTS:

Sl. no.	Component Details	Specification	Quantity
1.	NPN Transistor	C828, BD135	1 piece each
2.	Resistor	470Ω, 560Ω, 10KΩ, 220KΩ	1 piece each
3.	POT	10 KΩ, 100 KΩ	1 unit
4.	Trainer Board		1 unit
5.	DC Power Supply		1 unit
6.	Digital Multimeter		1 unit
7.	Chords and wire		as required

EXPERIMENTAL SETUP:

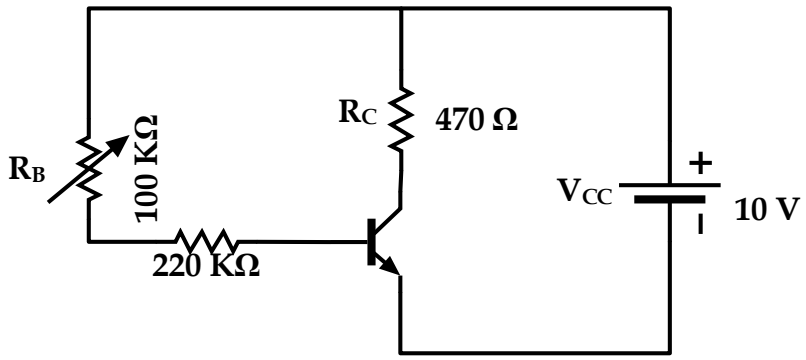

Figure 8.1: Experimental Circuit 1-Fixed Bias Configuration

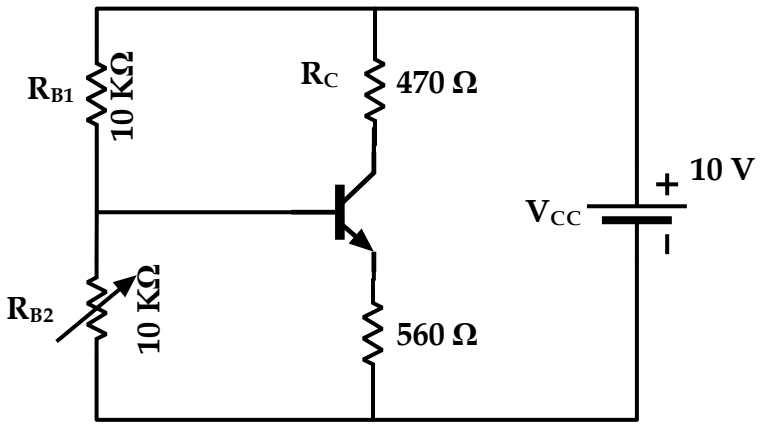

Figure 7.2: Experimental Circuit -Self Bias Configuration

PROCEDURES:

1. Arrange the circuit shown in figure-8.1 by C828. Record R_C and set R_B to maximum value.
2. Decrease POT $\mathbf{R_{B2}}$ gradually so that $\mathbf{V_{CE}} = \frac{V_{CC}}{2}$.
3. Measure voltage across R_C and V_{CE}. Record the Q-point (V_{CE}, I_C).
4. Replace the C828 transistor by BD135 and repeat step 2 and 3.
5. Arrange the circuit shown in figure-7.2 by C828. Record R_C and set R_B to minimum value.
6. Increase POT $\mathbf{R_{B2}}$ gradually so that $\mathbf{V_{CE}} = \frac{V_{CC}}{2}$.
7. Measure voltage across R_C and V_{CE}. Record the Q-point (V_{CE}, I_C).
8. Replace the C828 transistor by BD135 and repeat step 5 and 6.

ASSIGNMENTS:

1. Which circuit shows better stability? Explain in the context of the results obtained.
2. Draw the DC load line for both the circuits and show the Q-point on a graph paper.

Experiment No.: 08
Name of the Experiment: Study of Logic Gates using NMOSFET and Diode-Resistor Logic (DRL)

OBJECTIVES:

- To be familiar with the operation of MOSFET
- To be familiar with Logic gates using resistor and N-MOSFET
- To be familiar with Logic gates using resistor and diodes
- To study the internal connections of NAND, NOR, AND, and OR gates

THEORETICAL BACKGROUND:

NMOSFET Logic Gates: We know that a Metal Oxide Semiconductor Field Effect Transistor or MOSFET can operate as an on/off switch by using the gate voltage to operate the transistor in the triode region ("on" position) and in the cutoff region ("off" position).
Specifically, an NMOSFET behaves as a closed switch, exhibiting a very small resistance **(R_{on} or r_{DS})** between its drain and source terminals when its gate voltage is "high," usually at the power-supply level V_{DD}, which represents a logic 1. Conversely, when the gate voltage is "low" (i.e., at or close to ground voltage), which represents a logic 0, the transistor is cut off, thus conducting zero current and acting as an open switch. This is illustrated in Fig. 8.1.

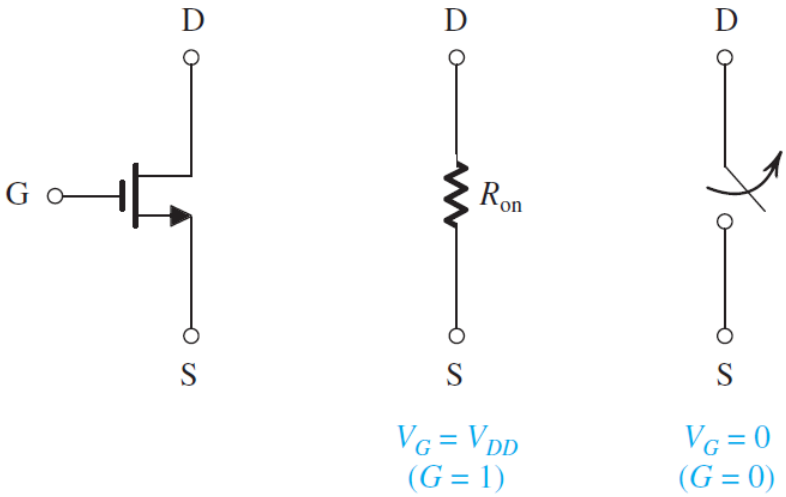

Figure 8.1: Operation of an NMOSFET as an on/off switch.

Diode-Resistor Logic (DRL) Gates: The 5-V level of Fig. 8.2 is assigned a "1" for Boolean algebra and the 0-V input is assigned a "0." An OR gate is such that the output voltage level will be a 1 if either *or* both inputs is a 1. The output is a 0 if both inputs are at the 0 level.

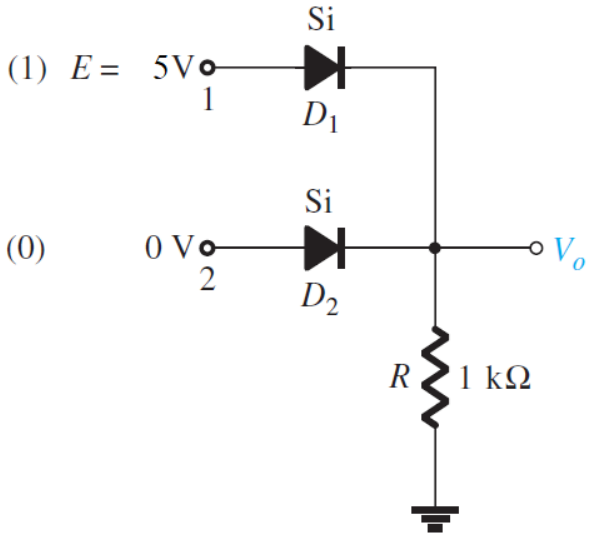

Figure-8.2: Positive logic OR gate.

First note that there is only one applied potential; 5V at terminal 1. Terminal 2 with a 0V input is essentially at ground potential, as shown in the redrawn network of Fig. 8.3. Figure 8.3 "suggests" that D_1 is probably in the "on" state due to the applied 5 V, whereas D_2 with its "positive" side at 0 V is probably "off." Assuming these states will result in the configuration of Fig. 8.4.

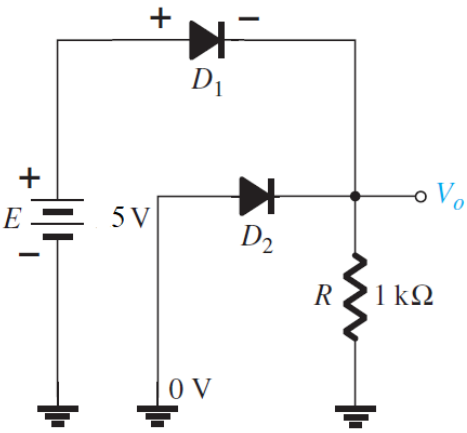

Figure-8.3: *Redrawn network of Fig. 8.2.*

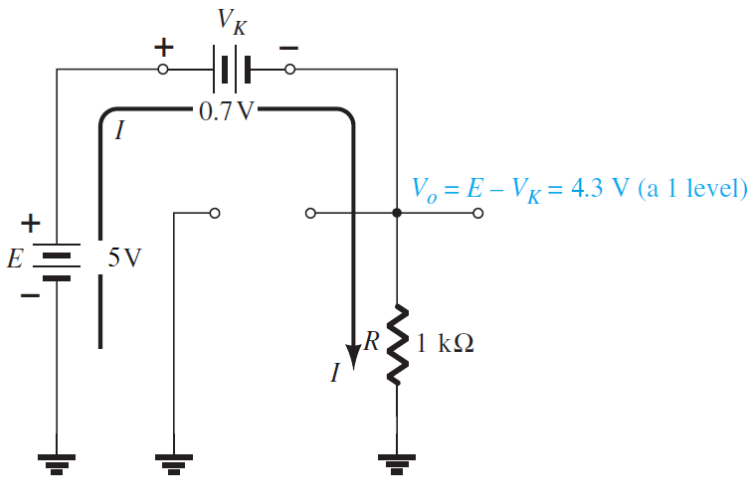

Figure-8.4: *Assumed diode states for Fig. 8.2.*

The output voltage level is not 5V as defined for an input of 1, but the 4.3 V is sufficiently large to be considered a 1 level. The output is therefore at a 1 level with only one input, which suggests that the gate is an OR gate. An analysis of the same network with two 5V inputs will result in both diodes being in the "on" state and an output of 4.3 V. A 0V input at both inputs will not provide the 0.7 V required to turn the diodes on, and the output will be a 0 due to the 0V output level.

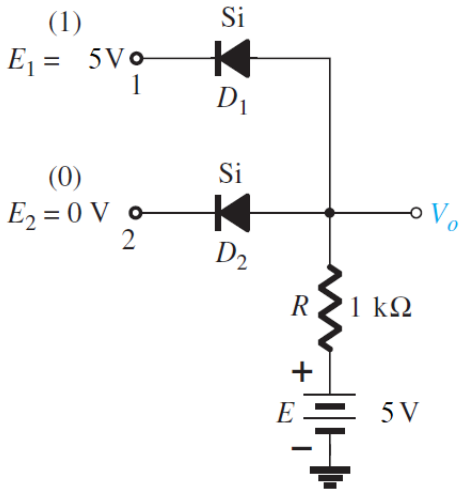

Figure-8.5: Positive logic AND gate.

In case of Fig. 8.5, an independent source appears in the grounded leg of the network, and it is chosen at the same level as the input logic level. The network is redrawn in Fig. 8.6 with initial assumptions regarding the state of the diodes. With 5V at the cathode side of D_1 it is assumed that D_1 is in the "off" state even though there is a 5V source connected to the anode of D_1 through the resistor.

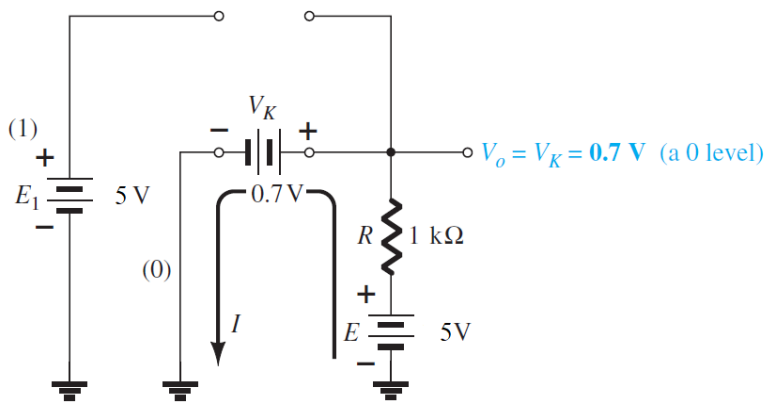

Figure-8.6: Substituting the assumed states for the diodes of Fig. 8.5

For D_1, where will the 0.7 V come from if the input and source voltages are at the same level and creating opposing "pressures"?
D_2 is assumed to be in the "on" state due to the low voltage at the cathode side and the availability of the 5V source through the 1 kΩ resistor. For the network of Fig. 8.6, the voltage at *Vo* is 0.7 V due to the forward-biased diode D_2. With 0.7 V at the anode of D_1 and 5 V at the cathode, D_1 is definitely in the "off" state. Although not 0 V as earlier defined for the 0 level, the output voltage is sufficiently small to be considered a 0 level. For the AND gate, therefore, a single input will result in a 0-level output.

EQUIPMENTS & COMPONENTS:

Sl no.	Component Details	Specification	Quantity
1.	e-type NMOSFET	IRFZ44N	3 pieces
2.	p-n junction Diode	1N4007	2 pieces
2.	Resistor	1 kΩ	3 pieces
3.	LEDs	Red/Green/Yellow	1 unit
4.	Trainer Board		1 unit
5.	DC Power Supply		1 unit
6.	Digital Multimeter		1 unit
7.	Chords and wire		as required

CIRCUIT DIAGRAMS:

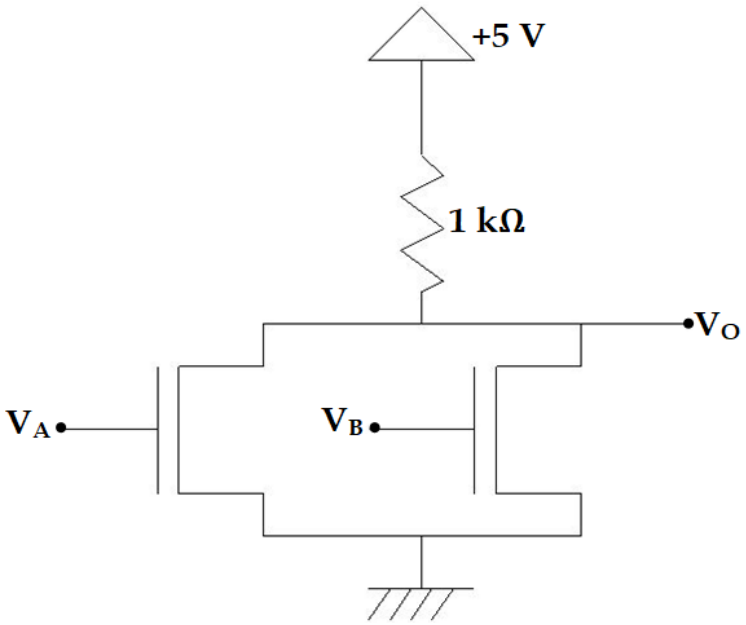

Figure-8.7: *NMOSFET NOR Gate.*

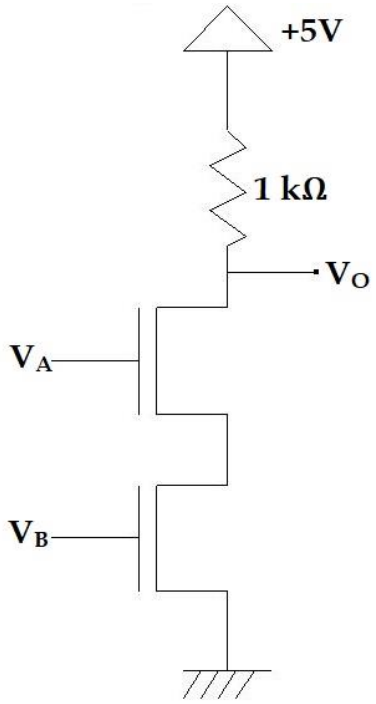

Figure-8.8: *NMOSFET NAND Gate.*

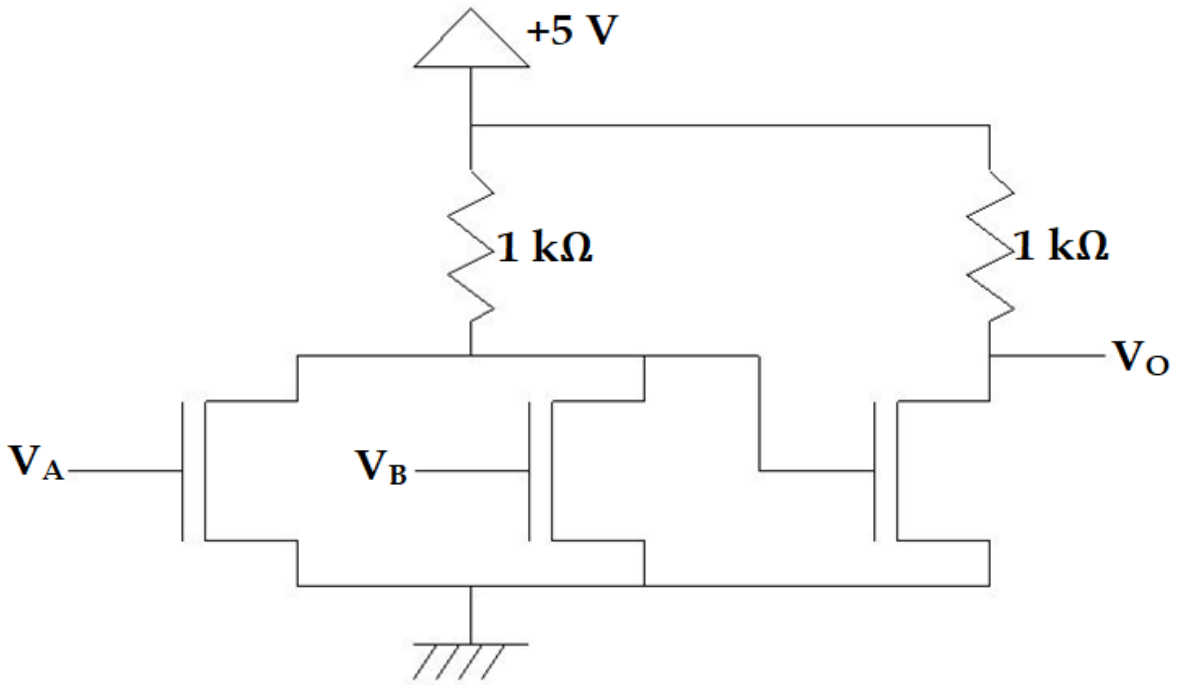

Figure-8.9: NMOSFET OR Gate

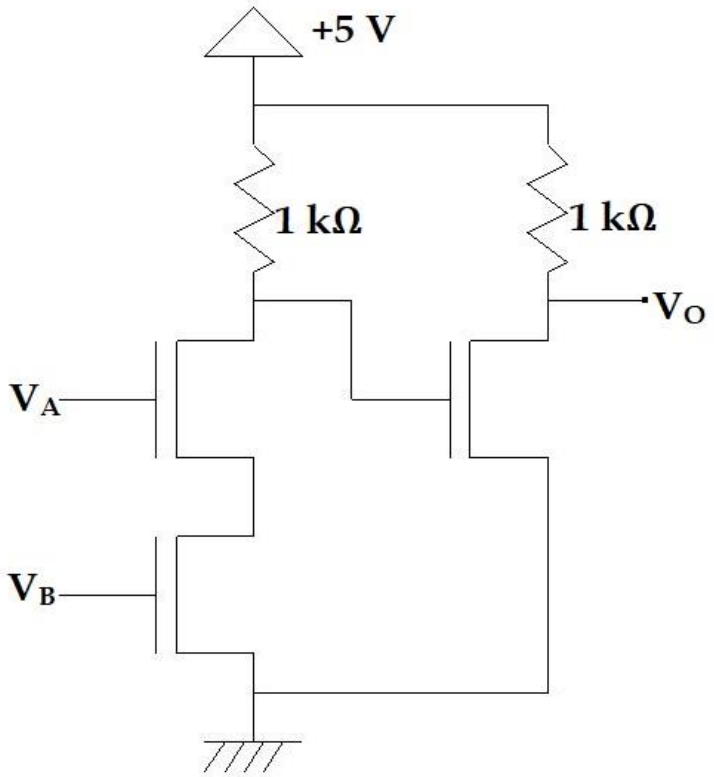

Figure-8.10: NMOSFET AND Gate

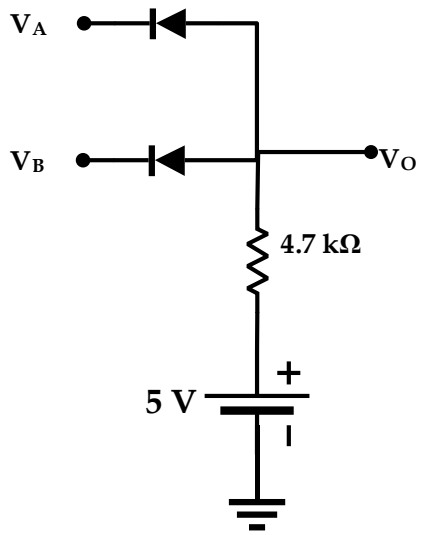

Figure-8.11: *DRL AND Gate.*

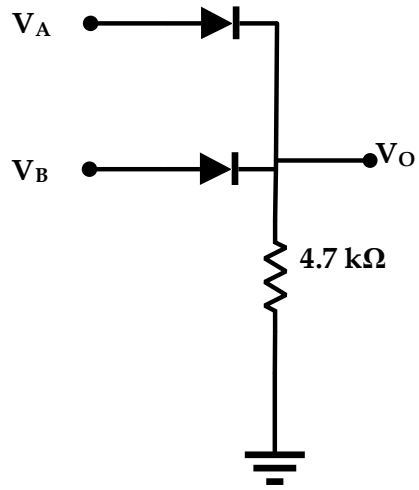

Figure-8.12: *DRL OR Gate.*

Procedures:

1. Connect all the logic circuits shown in figures 8.7-8.12.
2. Test the truth tables by connecting an LED at the output.
3. Measure the voltage V_O for each output logic levels of the truth tables.

Report:

1. Design an NMOSFET Inverter and explain its logical operation.
2. Set up all the logic circuits in TINKERCAD and submit the snapshots of all the output logics.

Experiment No: 09
Name of the experiment: Introduction to OPAMPs.

INTRODUCTION:

The Operational Amplifier (abbreviated as OPAMP) is a direct-coupled high-gain amplifier to which feedback is added to control its overall response characteristic. It has very high (ideally ∞) input impedance, very low (ideally 0) output impedance and large bandwidth and its characteristics do not drift with temperature. It offers all the advantages of monolithic integrated circuits: small size, high reliability, reduced cost, temperature tracking and low offset voltage and current. For these reasons, it has gained wide acceptance as a versatile, predictable and economic system building block.

An OPAMP may be used to perform many mathematical operations. Some of these basic applications like Inverting Amplifier, Non-Inverting Amplifier, Inverter, Inverting Adder/Summing Amplifier, and Buffer/Voltage Follower are studied in this experiment.

***Inverting Amplifier*:** It amplifies the signal at its inverting input terminal and produces the inverse of this amplified signal at the output, provided, the value of the **feedback resistance (R_F)** and the **resistance in series with the input signal (R_{in})** are chosen correctly. Figure-9.1 shows an Inverting Amplifier, and from that figure, we can deduce the output equation of an Inverting Amplifier.

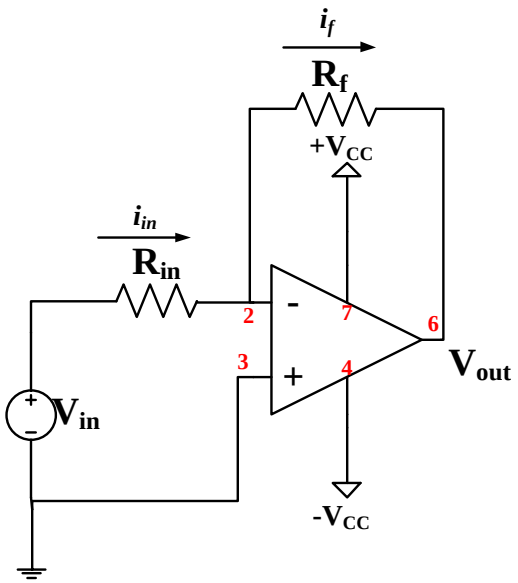

Fig.-9.1: Inverting Amplifier

Since terminal 3 is grounded, the voltage at terminal 2, V_2 =0 V. Also, since no current enters through the input terminals of an OPAMP, $i_{in} = i_f$

$$i_{in} = i_f$$

$$\Rightarrow \frac{V_{in}-0}{R_{in}} = \frac{0-V_{out}}{R_f} \Rightarrow \frac{V_{out}}{V_{in}} = \frac{-R_f}{R_{in}} = Gain$$

$$\therefore\ V_{out} = \frac{-R_f}{R_{in}} \times V_{in}$$

Inverter: When $R_{in}=R_f$, then $V_{out} = -V_{in}$. Then the inverting amplifier acts only as an INVERTER, *whose* ***gain= -1****. An inverter just inverts the input, does not amplify it.*
So, if we want to remove the negative (-) sign from the output equation, what should we do?

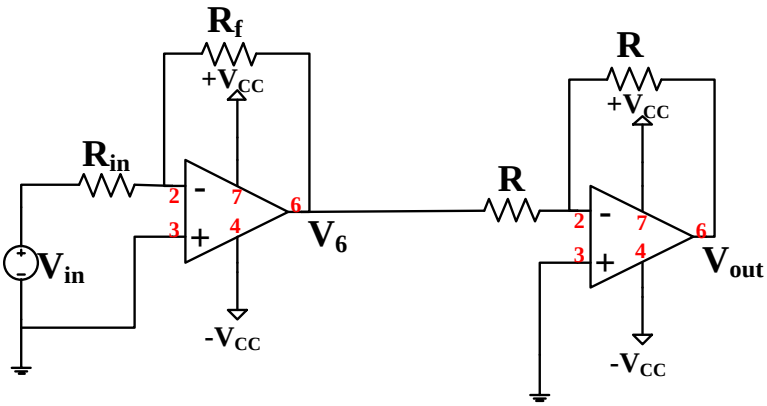

Fig.-9.2: Inverting Amplifier Cascaded with an Inverter

Well, it is quite simple. Connect an inverter at the output terminal of the inverting amplifier, as shown in figure-9.2.

***Non-Inverting Amplifier*:** It amplifies the signal at its non-inverting input terminal and produces the amplified signal at the output, provided, the value of the **feedback resistance (R_F)** and the **resistance at the inverting input terminal which is grounded (R_{in})** are chosen correctly. Figure-9.3 shows a Non-Inverting Amplifier, and from that figure, we can deduce the output equation of a Non-Inverting Amplifier.

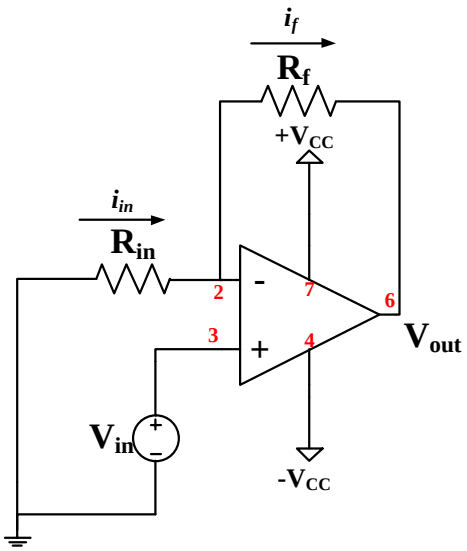

Fig.-9.3: Non-Inverting Amplifier

Since voltage at terminal 3 is $V_3=V_{in}$, the voltage at terminal 2, $V_2 = V_{in}$. Also, since no current enters through the input terminals of an OPAMP, $i_{in} = i_f$.

$$i_{in} = i_f$$

$$\Rightarrow \frac{0 - V_{in}}{R_{in}} = \frac{V_{in} - V_{out}}{R_f} \Rightarrow \frac{V_{in} - V_{out}}{V_{in}} = \frac{-R_f}{R_{in}}$$

$$\Rightarrow \frac{V_{out}}{V_{in}} = 1 + \frac{R_f}{R_{in}} = Gain$$

$$\therefore\ V_{out} = (1 + \frac{R_f}{R_{in}}) \times V_{in}$$

Voltage follower/Buffer: It produces almost the same output as is applied to its input. The input resistance of a voltage follower circuit is very high (several mega ohms). Therefore, it draws negligible current from a signal source. Thus, it works as a voltage buffer that provides a means of isolating an input signal from a load. Figure- 9.4 shows a Buffer or Voltage follower Circuit.

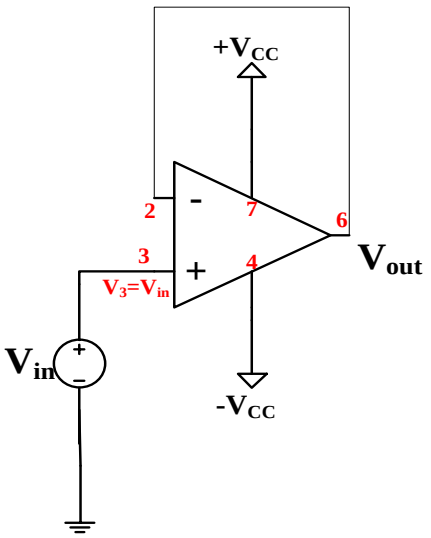

Fig.-9.4: Buffer/Voltage Follower

The above figure is also a NON-INVERTING AMPLIFIER configuration, but here input resistance R_{in} is opened, so $R_{in}=\infty$.

$$\therefore\ V_{out} = (1 + \frac{R_f}{\infty}) \times V_{in}$$

$$\Rightarrow V_{out} = (1 + 0) \times V_{in}$$

$$\therefore\ V_{out} = V_{in}$$

This configuration is called BUFFER, and its gain =1. Thus, **Non-Inverting Amplifier cannot have gain < 1.**

EQUIPMENTS & COMPONENTS:

Sl. no.	Component Details	Specification	Quantity
1.	OPAMP	741	2 pieces
2.	Resistors		As required
3.	Digital Storage Oscilloscope		1 piece
4.	Function generator		1 unit
5.	DC Power Supply		3 units
6.	Digital Multimeter		1 unit
7.	Trainer Board		1 unit

LAB TASKS:

- ***Design an appropriate amplifier circuit with OPAMP to obtain the following input-output waveshapes shown in figure-9.5.***

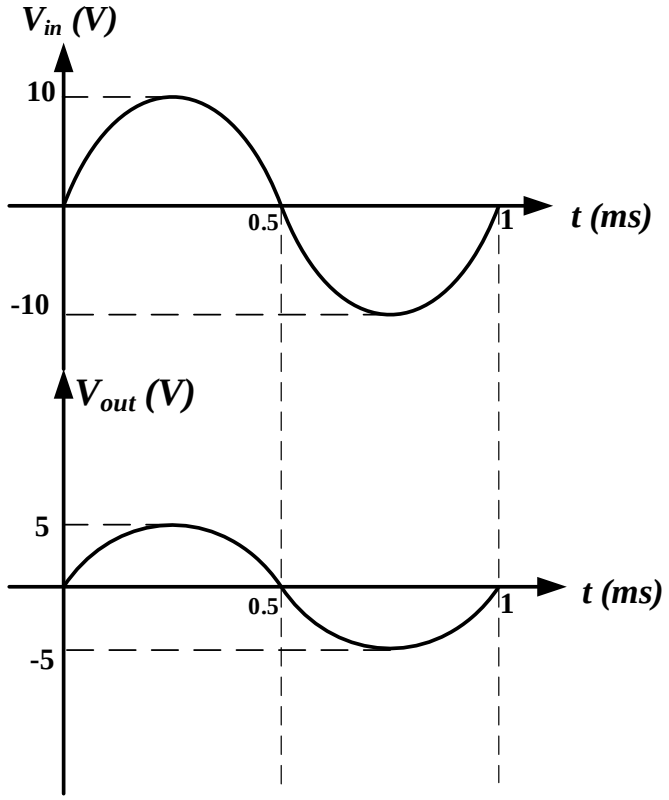

Fig.-9.5

At the first glance, it seems to be the output of a non-inverting amplifier since V_{OUT} is not inverted with respect to V_{in}. But the $Gain = \frac{V_{out}}{V_{in}} = \frac{5}{10} = \frac{1}{2}$ which is not possible for a non-inverting amplifier as its gain cannot be less than 1.

So, this is only possible with **an Inverting Amplifier cascaded with an Inverter** since the output is not inverted with respect to the input, just like the configuration shown in Figure-9.2.

The input here is not a DC input, it is a sinusoidal voltage with f= 1 kHz. So, we need two OPAMPs, and they are biased with +15V and -15V DC biasing voltages.
The gain of an inverting amplifier is

$$\frac{V_{out}}{V_{in}} = \frac{-R_f}{R_{in}} \Rightarrow \frac{-5}{10} = \frac{-R_f}{R_{in}}$$

[We considered V_{OUT} =-5V since the output of an inverting amplifier is inverted with respect to the input before cascading with an inverter]

$$\Rightarrow \frac{1}{2} = \frac{R_f}{R_{in}}$$

$$\therefore R_{in} = R_f \times 2$$

So, if we choose R_f= 1 kΩ, then R_{in} should be chosen as 2 kΩ as per the above design. Hence, the circuit looks like the following one shown in Figure-9.6.

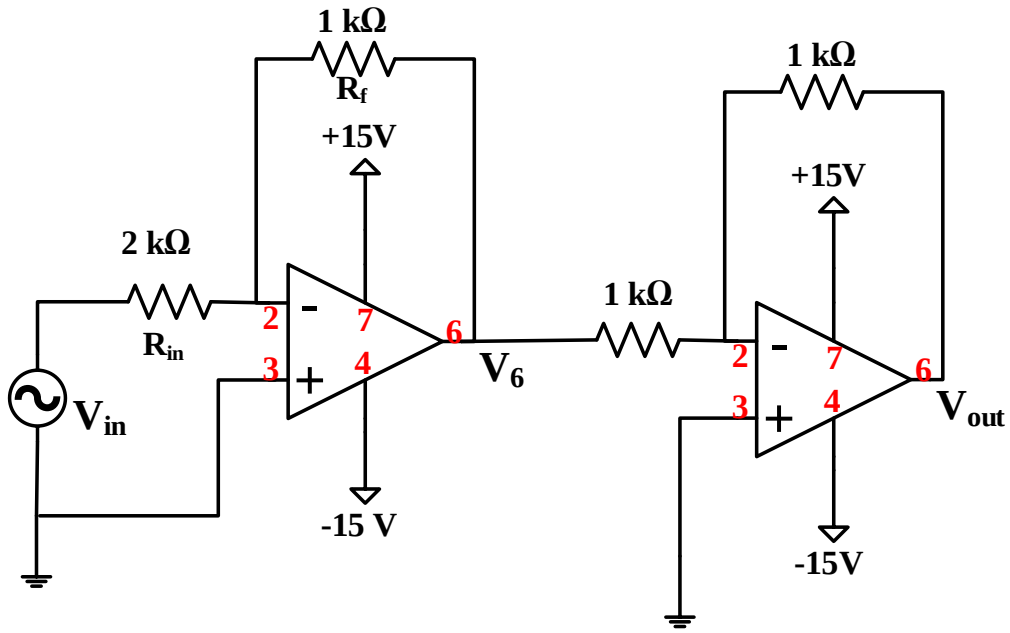

Fig.-9.6

Here, V_6 is the output of an inverting amplifier which is actually inverted, and then it is cascaded with an inverter, that means, V_6 is used as the input of an inverter to finally get a non-inverted output, V_{OUT}, as shown in figure-9.5.

- ***Design an appropriate amplifier circuit with OPAMP to obtain the following input-output waveshapes shown in figure-9.7.***

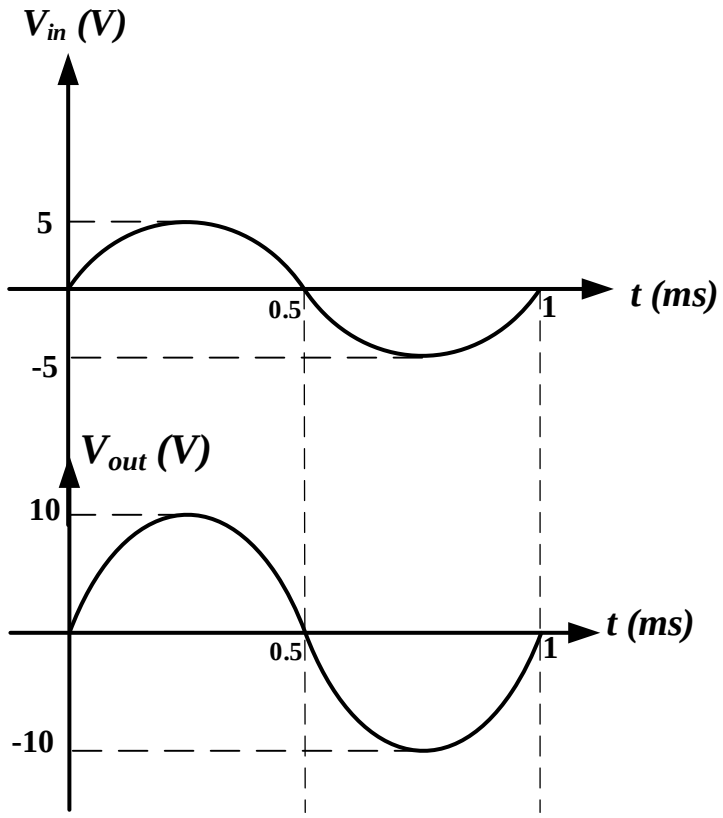

Fig.-9.7

Since, the Gain=$\frac{V_{out}}{V_{in}} = \frac{10}{5} = 2$, and the output is also not inverted with respect to the input, it can easily be obtained from a properly designed Non-Inverting Amplifier.

The gain of a non-inverting amplifier is

$$\frac{V_{out}}{V_{in}} = (1 + \frac{R_f}{R_{in}}) \Rightarrow \frac{10}{5} = (1 + \frac{R_f}{R_{in}})$$

$$\Rightarrow 2 = (1 + \frac{R_f}{R_{in}})$$

$$\Rightarrow 1 = \frac{R_f}{R_{in}}$$

$$\therefore R_{in} = R_f$$

So, if we choose R_f= 1 kΩ, then R_{in} should be chosen as 1 kΩ as per the above design. Hence, the circuit looks like the following one shown in Figure-9.8.

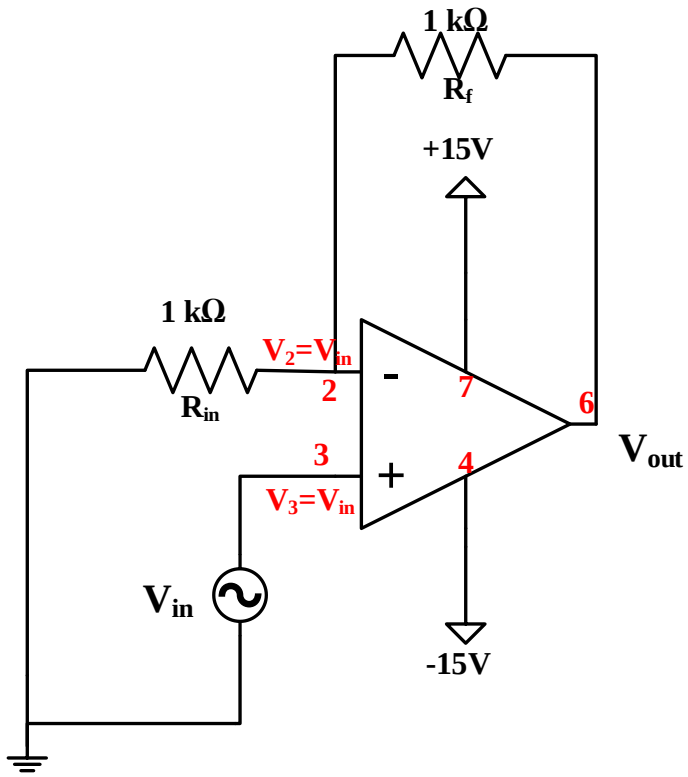

Fig.-9.8

ASSIGNMENTS:

1) Submit the Waveshapes of the circuit designs performed during Lab experiments.

2) Suppose, you are given an AC Sinusoidal Signal which has $\mathbf{V_{P\text{-}P} = 10\ V}$ and frequency = 1 kHz to be used as input to an OPAMP. You are required to produce an output having the opposite orientation and frequency as input signal and $\mathbf{V_{P\text{-}P} = 20V}$. Now design the circuit to obtain such output using OPAMP. Show the calculations manually and also submit the TINKERCAD Snapshots of this design.